END OF LIFE

LC-9100(RE) EXERCISE BIKE

GK18-00019-XXXX

SN# 815709 - UP

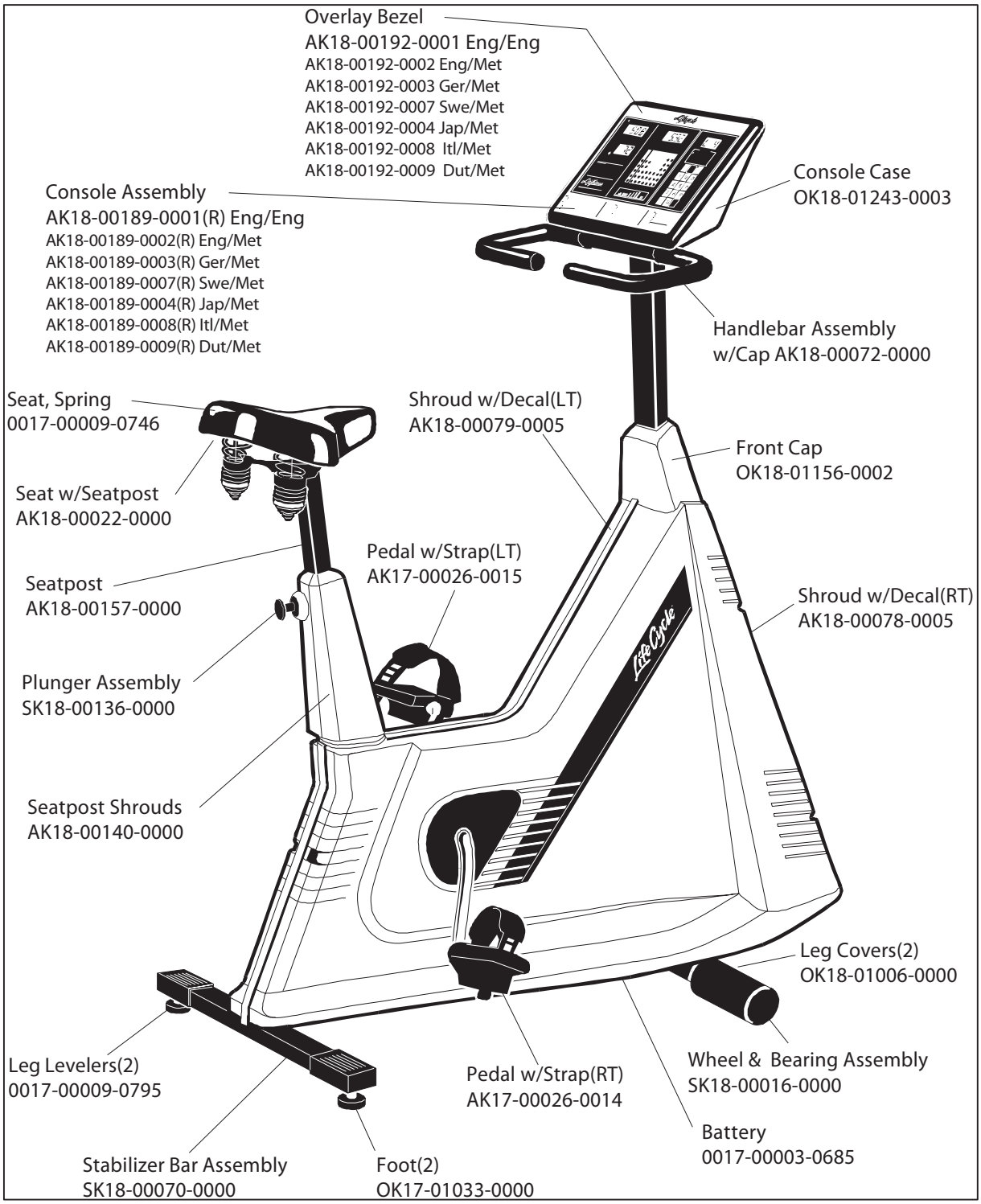

Revision Date: 10/28/98

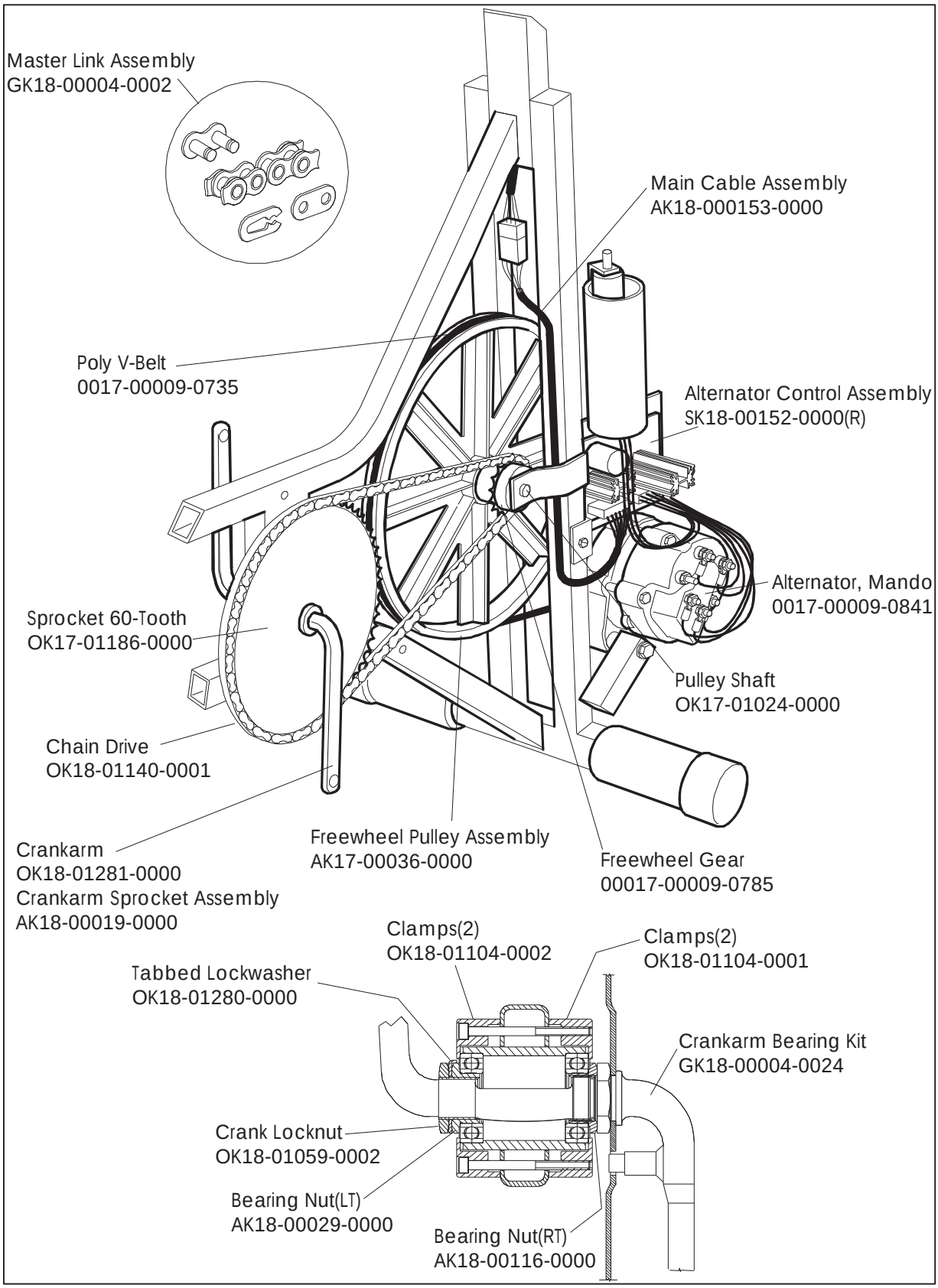
Master Link Assembly
GK18-00004-0002
Main Cable Assembly
AK18-000153-0000
Poly V-Belt
0017-00009-0735
Alternator Control Assembly
SK18-00152-0000(R)
Alternator, Mando
0017-00009-0841
Sprocket 60-Tooth
OK17-01186-0000
Pulley Shaft
OK17-01024-0000
Chain Drive
OK18-01140-0001
Crankarm
OK18-01281-0000
Crankarm Sprocket Assembly
AK18-00019-0000
Freewheel Pulley Assembly
AK17-00036-0000
Freewheel Gear
00017-00009-0785
Clamps(2)
OK18-01104-0002
Clamps(2)
OK18-01104-0001
Tabbed Lockwasher
OK18-01280-0000
Crankarm Bearing Kit
GK18-00004-0024
Crank Locknut
OK18-01059-0002
Bearing Nut(LT)
AK18-00029-0000
Bearing Nut(RT)
AK18-00116-0000